quarz werk YOUR FREQUENCY COMPANY

Kunden Artikel-Nr.:

Oscillator SMD7050-M4

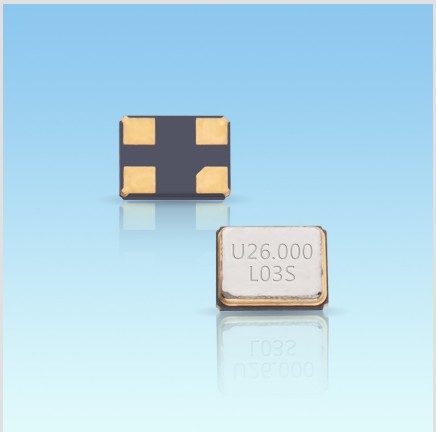

quarzwerk Part Number:	20-0016
Manufacturer:	Utech Electronics Technology Co., Ltd.
Series:	Oscillator SMD7050-M4
Type:	QOS7
Dimension (mm):	7.0 x 5.0 x 1.50
Frequency:	48.000000 MHz
Supply Voltage (V_{DD}):	+3.3 V_{DC}
Input Current:	20 mA max. (at 3.3V)
Frequency Tolerance:	±50 ppm
Output Logic / Output Load:	CMOS / 30 pF max., 15 pF typ.
Operating Temperature:	-40°C to +85°C
Storage Temperature:	-55°C to +125°C
Symmetry:	45% to 55%
Rise & Fall Time:	≤ 5 nS
Start-up Time:	≤ 5 mS
Pin1, Tri-State Function	Pin 1 = L … High Imped. at Pin 3, No Output
Package Unit:	1000pcs/reel
RoHS :	Pb free - 2011/65/EU (RoHS 2) compliant

Marking

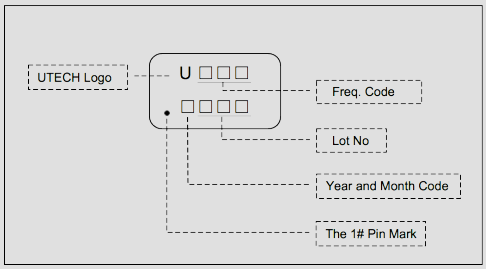

Dimension

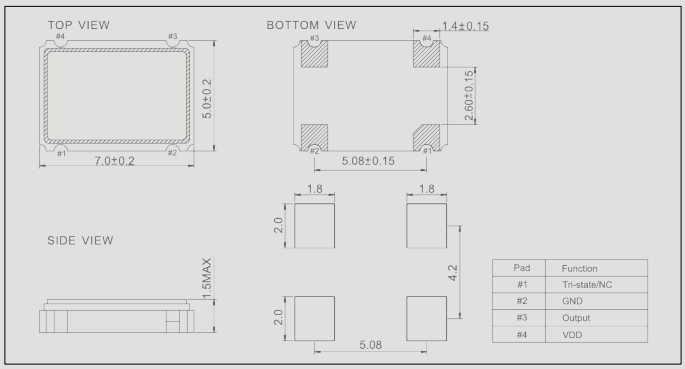

Recommended Reflow Soldering Standard Condition

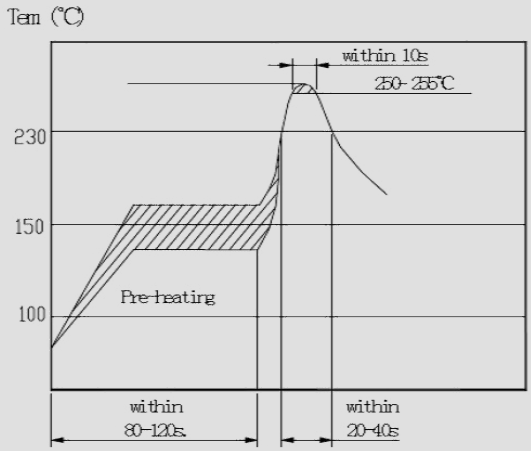

Document History

Date	Changes
28.01.2015	Released

quarzwerk 01 GmbH
Neckartal 154/1
D-78628 Rottweil
Phone +49.741.20 96 30-00
Fax +49.741.20 96 30-29
info@quarzwerk.net
www.quarzwerk.net

Package Information

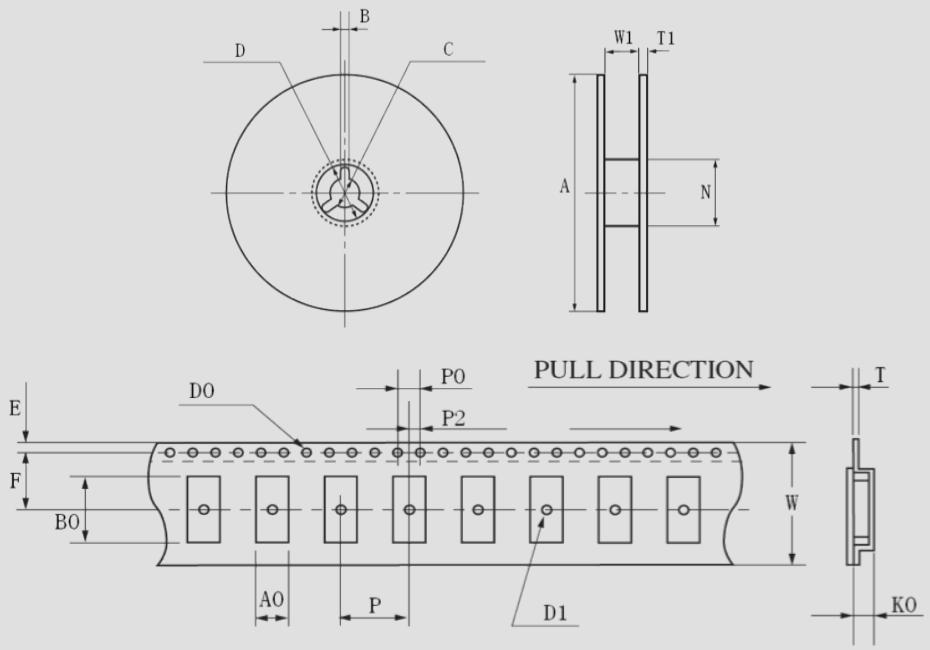

	HC-49SMD	7050	5032	5019	3225	3215	2520	2016
W	24.00±0.30	16.00±0.05	12.00±0.05	12.00±0.05	12.00±0.05	12.00±0.05	12.00±0.05	8.00±0.05
E	1.75±0.10	1.75±0.10	1.75±0.10	1.75±0.10	1.75±0.10	1.75±0.10	1.75±0.10	1.75±0.10
F	11.5±0.10	7.5±0.10	5.5±0.10	5.5±0.10	5.5±0.10	5.5±0.10	5.5±0.10	3.5±0.10
T	0.40±0.05	0.35±0.05	0.35±0.05	0.35±0.05	0.30±0.05	0.30±0.05	0.30±0.05	0.20±0.02
P	12.00±0.10	8.00±0.10	8.00±0.10	8.00±0.10	8.00±0.10	8.00±0.10	4.00±0.10	4.00±0.10
P0	4.00±0.10	4.00±0.10	4.00±0.10	4.00±0.10	4.00±0.10	4.00±0.10	4.00±0.10	4.00±0.10
P2	2.00±0.10	2.00±0.10	2.00±0.10	2.00±0.10	2.00±0.10	2.00±0.10	2.00±0.10	2.00±0.10
D0	φ1.50+0.10	φ1.50+0.10	φ1.50+0.10	φ1.50+0.10	φ1.50+0.10	φ1.50+0.10	φ1.50+0.10	φ1.50+0.10
D1	φ1.50MIN	φ1.50MIN	φ1.50MIN	φ1.50MIN	φ1.50MIN	φ1.50MIN	φ1.50MIN	φ1.00MIN
A0	4.60±0.10	5.40±0.10	3.60±0.10	3.60±0.10	2.85±0.10	2.85±0.10	2.20±0.10	1.90±0.10
K0	4.40±0.10	1.80±0.10	1.50±0.10	1.50±0.10	0.85±0.10	0.85±0.10	0.85±0.10	0.60±0.05
B0	14.20±0.15	7.40±0.10	5.40±0.10	5.40±0.10	3.55±0.10	3.55±0.10	3.55±0.10	2.30±0.10
A	φ330±1.0	φ178±2.0	φ178±2.0	φ178±2.0	φ178±2.0	φ178±2.0	φ178±2.0	φ178±1.0
B	2.30±0.20	2.00±0.50	2.00±0.50	2.00±0.50	2.00±0.50	2.00±0.50	2.00±0.50	2.00±0.50
C	φ13.5±0.20	φ13.2±0.20	φ13.2±0.20	φ13.2±0.20	φ13.2±0.20	φ13.2±0.20	φ13.2±0.20	φ13.0±0.20
D	φ21.5±0.20	φ20.0±0.50	φ20.0±0.50	φ20.0±0.50	φ20.0±0.50	φ20.0±0.50	φ20.0±0.50	φ20.0±0.50
N	φ100.0±0.5	φ60.5±1.0	φ60.5±1.0	φ60.5±1.0	φ60.5±1.0	φ60.5±1.0	φ60.5±1.0	φ60.0±1.0
W1	24.5±0.20	16.5±0.20	12.5±0.20	12.5±0.20	12.5±0.20	12.5±0.20	12.5±0.20	8.4±0.20
T1	2.30±0.20	1.80±0.20	1.80±0.20	1.80±0.20	1.80±0.20	1.80±0.20	1.80±0.20	1.50±0.20

quarzwerk 01 GmbH
Neckartal 154/1
D-78628 Rottweil
Phone +49.741.20 96 30-00
Fax +49.741.20 96 30-29
info@quarzwerk.net
www.quarzwerk.net