quarz werk YOUR FREQUENCY COMPANY

Quarz SMD1350

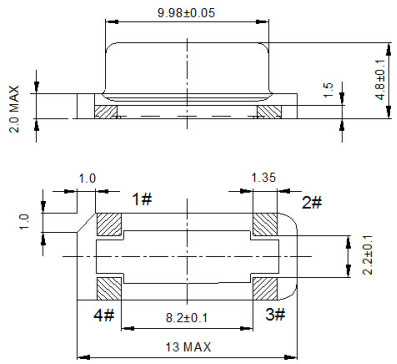

pin	Fuction
1#	Crystal
2#	GND
3#	GND
4#	Crystal

quarzwerk part number	10-0410
Manufacturer	Utech Technology Co., Ltd.
Series	SMD1350
Type:	QRSZ
Dimension max. (mm)	13.1 x 5.0 x 5.0
Frequency	4.000000 MHz
Mode	Fundamental AT-Cut
Load Capacity CL	30 pF
Frequency Tolerance at +25°C	±30 ppm
Frequency Tolerance over Temperature	±100 ppm
Operating Temperature	-40°C to +85°C
Storage Temperature	-55°C to +125°C
Equivalent Series Resistance (ESR)	150 Ohm max.
Drive Level	10 µW to 500 mW (Typical: 10 µW)
Aging	Fist year ±5 ppm max.
Shunt Capacitance	7.0 pF Max.
Package Unit	1000 pcs/reel

Marking

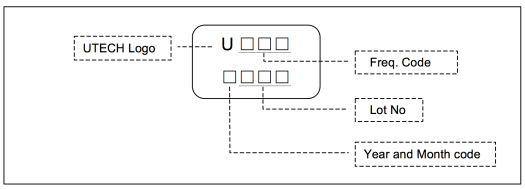

Year and Month Code:

Year \ Month				1	2	3	4	5	6	7	8	9	10	11	12
2009	2013	2017	2021	A	B	C	D	E	F	G	H	J	K	L	M
2010	2014	2018	2022	N	P	Q	R	S	T	U	V	W	X	Y	Z
2011	2015	2019	2023	a	b	c	d	e	f	g	h	j	k	l	m
2012	2016	2020	2024	n	p	q	r	s	t	u	v	w	x	y	z

Reflow Soldering Condition

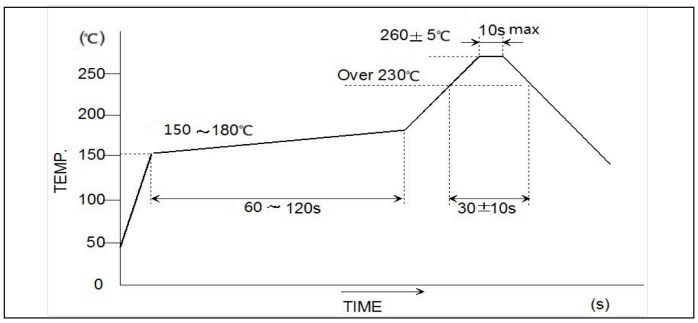

quarzwerk 01 GmbH
Neckartal 154/1
D-78628 Rottweil

Phone +49.741.20 96 30-00
Fax +49.741.20 96 30-29
Email info@quarzwerk.net